ELF

Configured Fiber Product Part Number Decoder

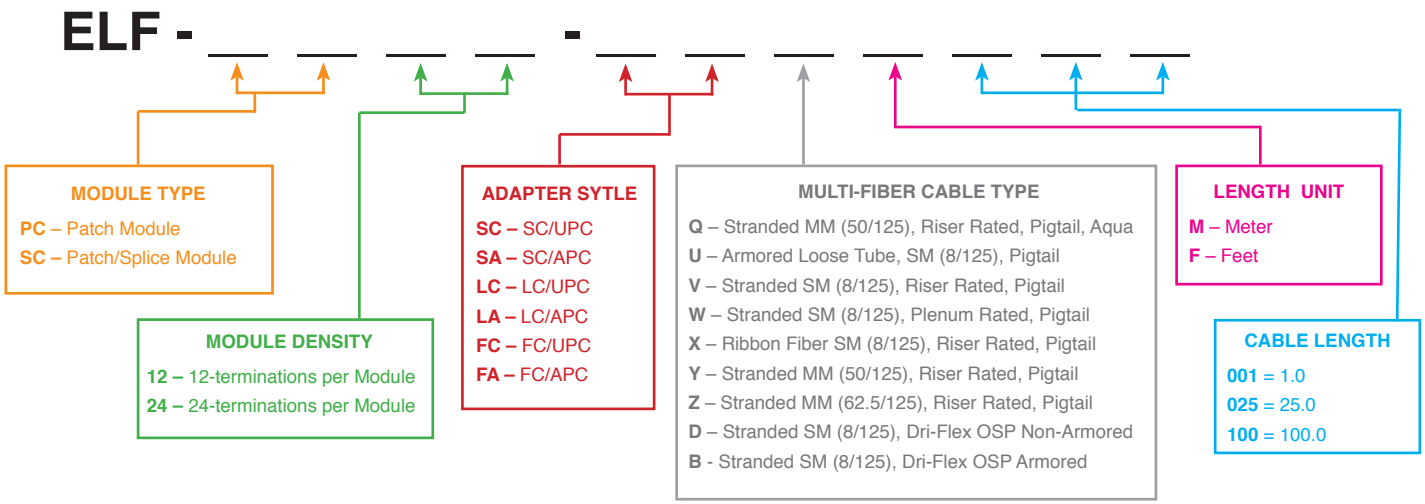

© Telect, Inc., All Rights Reserved, 5.13
1.509.926.6000 :: telect.com